Product information

Series AMI

Codelock module
AMI11200

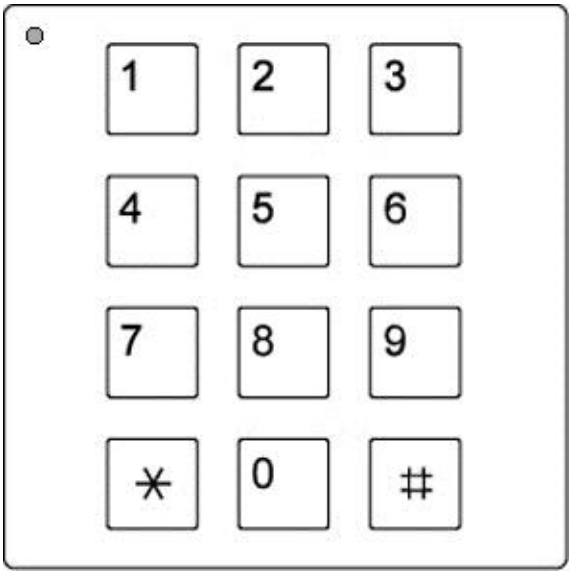

Note on the validity of this product information

This product information states specific information on the module.
It is only valid in combination with the enclosed product information *Modules of the series AMI in front-door stations.*

Table of contents

Scope of delivery

1 x Codelock module AMI11200
3 x Spacer foil 0.5 mm
1 x 4-pin connecting cable
4 x Securing nut M4
Product information Codelock module AMI11200
Product information module of the series AMI in front-door stations

Intended use

- The codelock module AMI11200 is a module for front-door stations of the series AMI in individualised assembly.
- It can be combined with the display module AMI1010x and the built-in door loudspeaker module AMI11100.

Short description

- LEDs for status indictaion
- Optical and acoustic acknowldgement when code is entered
- TCS:BUS®-enabled
- 20 access codes (max. 8-digits, can be adjusted with configuration software configo™) with individual trigger functions:
  door release function with potential-free relay contact (two-way contact: 30 V AC/DC, 2 A), general and specific control functions
- 10 access codes for programming, manually
- One master code for maintenance and configuration
- Can be switched to keypad mode

Technical Data

housing	aluminium, anodised
H x W x D	105 x 105 x 19 mm
weight	210 g
acceptable ambient temperature	−25 °C to +55 °C
input current standby max. input current	I(a) = 0.4 mA, I(P) = 3 mA I(Pmax) = 17 mA
6-wire technique necessary!	

Overview

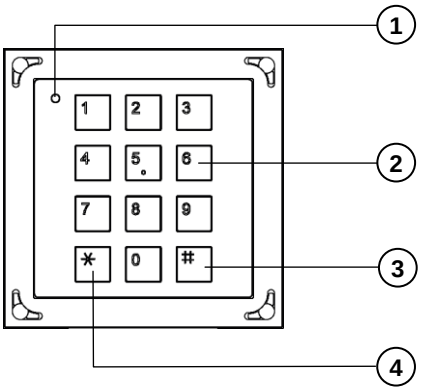

1 Two-colored-LED

OFF: standby mode
ON red: 3 s – code denied
2 min – blocking after three wrong code entries,

Blinks green: programming mode is active
ON green: code has been accepted (can be deactivated, duration adjustable)
Flashes ON green: programming mode at power supply and control unit initiated
Flashes ON red and green (orange): total error indication

2 Numerical keys

enter access codes,
enter instruction sequences and parameters for configuration

3 *-key

initiate instruction sequences when configuring in programming mode, abort of incomplete instruction sequences

4 #-key

completing of instruction sequences and code entries, separation of parameters of command inputs (example: * 0 # 3 #), light switch function

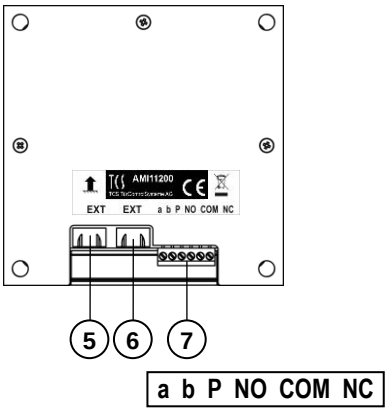

5 Connection

further module with 4-pin connecting cable (e.g. display module AMI1010x or built-in door loudspeaker module AMI11100)

6 Connection

further module 4-pin connecting cable (e.g. bell button module AMI1090x)

7 Connection

TCS:BUS® and switching output

Installation

Installation example

Connect the module within the front-door station

After the installation into the front panel, the modules themselves have to be wired.

- In combination with other modules, the codelock module is connected via the modular BUS (4-pin connecting cable).

*codelock module **AMI11200*** *bell button module **AMI 10900***

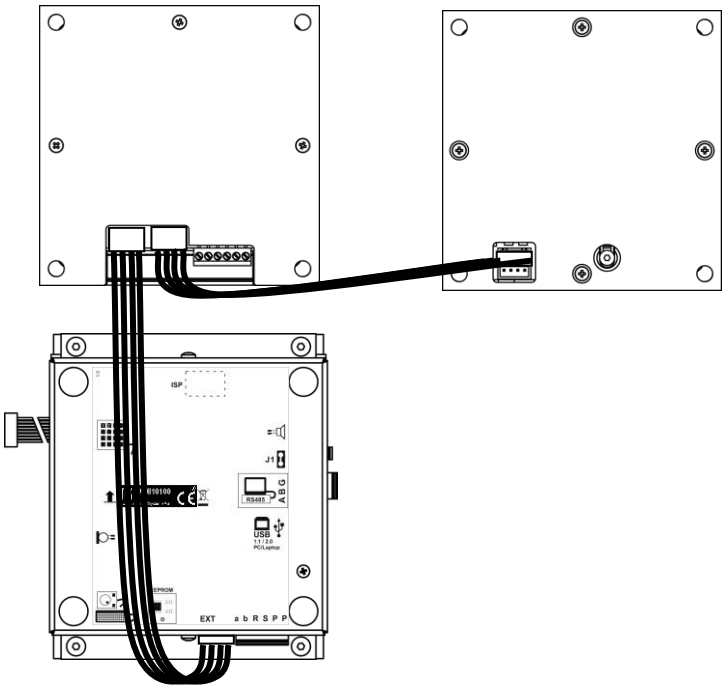

*display module **AMI1010x***

Connecting the lines

Wiring diagram codelock module AMI11200, stand-alone operation

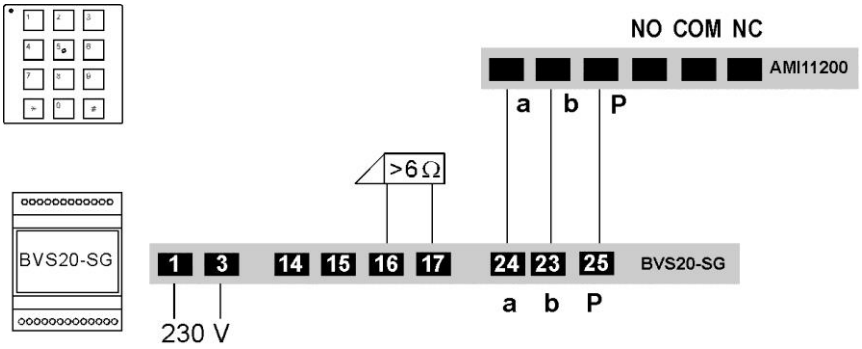

Door opener is not included in the delivery.

Commissioning

Error detection and indication

Errors are displayed optically when detected and acoustically when pressing a button (one-time and only when in operation mode codelock): error tone and constant flashing of the two-color LED.
When pressing a button, the error tone sounds again.
The optical error indication remains active until the error has been fixed.

Error cause	Indication	Error tone	Solution
a- and P-wire: interchanged or short-circuit between a- and P-wire	LED flashes orange		Interchange a- and P-wire or remove short-circuit, module returns to standby mode
a-wire: not connected or not supplied			Connect a-wire or check power supply, module returns to standby mode
button is stuck (pressed more than 15 s)			Release button, module returns to standby mode

Configuration

Factory settings

Operating mode	Codelock
AS-address for door release function	0
Send light switch protocol (#-key)	active
Acoustic signaling when pressing a button (acknowledgement tone)	active
Activate programming mode always at the power supply and control unit first	active
Programming lock	OFF
Mastercode	Serial number of the codelock module
Relay switch time	circa 3 s
Switch relay when door release protocol is received	active
Central mode	OFF
1. access code (on memory address no 1)	111
1. access code / parameter (on memory address no 1)	Sends door release protocol with AS-address, relay switches
2.-20. Access code (on memory address no 2 to 20)	Not assigned
2.-20. Access code / parameter (on access code no 2 to 20)	Sends door release protocol with AS-address, relay switches, data set is not active

Timeout code entry	10 s
Blocking after three wrong code entries	2 min
Timeout programming mode	2 min

Further presettings: see programming manual functional group with display module.

Configuration options

	manually	**TCSK-01**	**configo™** as of version 1.7.1
AS-address	**x**	**-**	**x**
Relay switch time	**x**	**-**	**x**
Programming lock (ON/OFF)	**x**	**-**	**x**
Switch relay contact when TCS:BUS door release protocol	**x**	**-**	**x**
Always first switch ON programming mode at the power supply and control unit (ON/OFF)	**x**	**-**	**x**
Button acknowledgement tone (ON/OFF)	**x**	**-**	**x**
Send light switch protocol (ON/OFF)	**x**	**-**	**x**
Access codes 1 to 10 and parameter	**x ***	**-**	**x****
Load factory settings	**x**	**-**	**x**

***** up to 10 codes
****** up to 20 codes

Programming

Important information

- When the correct code is entered, a positive acknowledgement tone sounds (). If the entry of an instruction sequence ⊛ ⓪…⑨ # is interrupted for 10 seconds, the whole instruction sequence will be discarded, a negative acknowledgement tone sounds ().
- Entries which are not confirmed timeout after 10 sec.
- If the instruction sequence does not correspond to the given syntax or too many parameters have been entered, also the complete instruction sequence will be discarded, a negative acknowledgement tone sounds.
- Each keystroke is acknowledged by the module with a short button acknowledgement tone ( ).
- Confirm with #-key, abort with *-key
- The factory settings of the 10 code memory addresses are given in brackets e.g. (factory setting = 0).

Legend LED indication modes:

	flashes every 2 s	blinks	ON	OFF
green	G	G	G	●
red			R	●

Initiate programming

action	**discription**
only when programming, set options, option 4:	(factory setting = 0)
switch the programming mode of the system On and OFF again	At power supply and control unit: • shortly press RUN/PROG button, LED flashes. • shortly press RUN/PROG button, LED is ON. At AMI11200: Two-color LED flashes green for 2 minutes
switch device to programming mode	
enter mastercode (start with the programming within **2 min**)	entry: * **mastercode** #. (factory setting = serial number of the codelock module)
correct entry	A positive acknowledgement tone sounds for 3 sec. (simple beep tone), LED blinks green (2 min). **The device is ready for programming.**
incorrect entry, unknown mastercode	*A negative acknowledgement tone sounds (3x beep tone) when pressing the #-key. The code can only be entered 3 x wrong, then the code entry is locked for 2 min.* *Start again.*
no entry	*If no command has been entered for 2 min, the device automatically ends the programming mode, the LED goes OFF.*

Programming

Set/change access code First access code second access code and so on	Entry: *** 0 # memory address no 1 # access code # access code #** Entry: *** 0 # memory address no 2 # access code # access code #** Memory address no = 1 to 10 Access code = max. 8-digit number (1 to 8 digits) If changing the code, the old code is overwritten with new code.
Activate/deactivate relay for code	Entry: *** 1 # memory address no # R #** R – relay function Memory address no = 1 to 10 (factory setting = 1 for SpNr****** 1 to 10) R = 1 ON 0 OFF (relay without function)
Define send protocol when code is entered	Entry: *** 2 # memory address no # P #** P – choose protocol Memory address no = 1 to 10 (factory setting = 0 for SpNr****** 1 to 10) P = 0 (door release protocol with own AS-address) 1 (control function 1 with own serial number) 2, 3, 4, 5 free protocols 6 (control function SpNr****** with own serial number) 7 (send no protocol)
Delete data set (for a certain memory address)	Entry: *** 3 # memory address no #** Memory address no = 1 to 10
Enter AS-address	Entry: *** 4 # AS-address #** AS-address = 0 to 63 (factory setting = 0)
Set options Only option 4: Initiate programming (switch the programming mode of the system ON and Off again)!	Entry: * 5 # option # value # option: value: 0 Send light switch protocol 0 = no, 1 = yes (WE* = 1) 1 Accept door release protocols 0 = no, 1 = yes (WE* = 1) 2 Reserved (WE* = 0) 3 Button acknowledgement tone 0 = OFF, 1 = ON (WE* = 1) 4 Switch ON programming mode at the power supply and control unit, then start programming 0 = no, 1 = yes (WE* = 1) 5 Switch over operation mode 0 = codelock module, 1 = keypad module (WE* = 0) * WE = factory setting ****** SpNr = memory address

Relay switch time	Entry: *** 8 # value #** value = switching time adjustable in 128 ms-steps, 0- … 250-fold 0 = deactivated (factory setting = 24; corresponds to ca. 3 s)
Activate programming lock	entry: *** 10 # mastercode #** mastercode = number with max. 8-digits **!** ATTENTION: The lock cannot be deactivated manually. Only qualified TCS service personnel can remove the lock at your expense!
Change mastercode	Entry: *** 98 # old mastercode # new mastercode # new mastercode #** New mastercode = number with max. 8-digits **!** ATTENTION: For security reasons, the factory-set mastercode should be changed when commissioning!
Load factory setting	Entry: *** 99 # mastercode # mastercode #** mastercode = number with max. 8-digits **!** ATTENTION: set access codes will be deleted

Deactivate programming mode

Exit programming mode	Entry: * **9** #

Operation

Door release (operating mode codelock)

Basic mode	
Enter access code	• enter access code. • confirm with #-key.
Correct entry	A positive acknowledgement tone sounds, LED is green. Door opener is triggered.
Incorrect entry, unknown access code	*A negative acknowledgement tone sounds (3x beep tone) when pressing the #-key, LED is red.* *The code can only be entered 3 x wrong, then the code entry is locked for 3 min.* *Start again.*

Switch lights (operating mode codelock)

Basic mode	
Press #-key	• press #-key without having entered a code *provided that the function has been activated (see programming, set options).*

Operating mode keypad

In this operating mode, the codelock module does not evaluate a keystroke. Optical or acoustic acknowledgements, switching the relay contact are controlled by a main module. The only acknowledgement is the button acknowledgement tone.

Accessory

Short text	**Article number**
Maintenance package	FBI1210-0

Service

For questions please contact

hotline@tcsag.de

Headquarters
TCS TürControlSysteme AG, Geschwister-Scholl-Str. 7, D-39307 Genthin
Telefon: +49 (0) 39 33 / 87 99 10, Fax: +49 (0) 39 33 / 87 99 11, E-Mail: info@tcsag.de, Internet: www.tcsag.de