Product information

IP audio / video gateway BASIC

FBI6119-0400

for 10 call destinations

as of software version 02 A

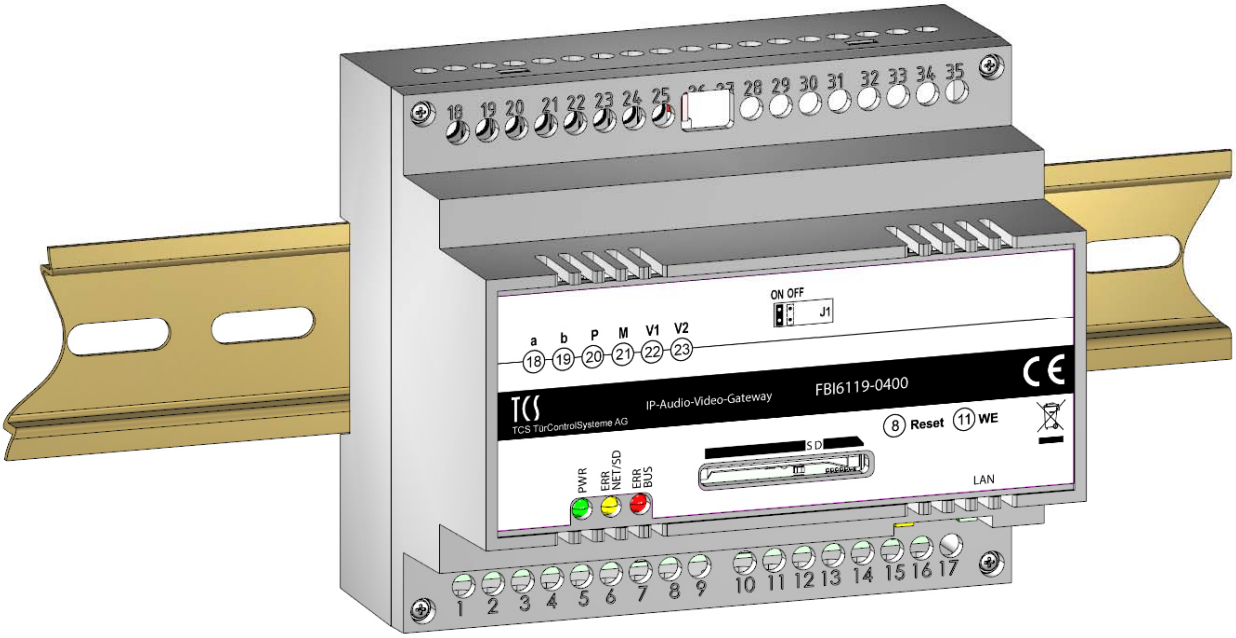

Table ofcontents

Scope of delivery

1 x FBI6119-0400
1 x jumper for matching resistor
1 x product information

introduction

Notes on this product information

ℹ	This product information refers exclusively to qualified electricians.

The product information contains important notes on intended use, installation and initial operation. Please, keep the product information at a suitable place, where it is easily accessible for maintenance and repair reasons.
All product information are available in the download area at www.tcsag.de .

ℹ	For further information on commissioning see the manual FBI6119-0400 or consult your network administrator. All manuals are available in the download area at www.tcsag.de .

Used symbols and warning notices

Symbol	signal word	Explanation
⚠	DANGER!	The signal word describes an endangering with a high level of risk. Failure to observe this warning will result in death or very serious injury.
⚠	WARNING!	The signal word describes an endangering with a medium level of risk. Failure to observe this warning could result in death or very serious injury.
⚠	CAUTION!	The signal word describes an endangering with a low level of risk. Failure to observe this warning could result in a minor or moderate injury.
!	ATTENTION!	The signal word indicates, that damages on equipment, environment and property can occur.

Further used symbols

ℹ	important note or important information
📹	video identification according to DIN 33450
▶	Step
☞	cross reference For further information on this topic, see source
•	list, list entry 1 level
–	list, list entry 2 level

Safety instructions

General safety regulations

Assembly, installation, commissioning and repair of electronic devices must be carried out by qualified electricians.
Observe the latest regulations and standards for system installations.

WARNING! **Danger to life due to electric shock**

Observe the safety regulations according to DIN VDE 0100, when working on main power connections of 230 V.

When installing TCS:BUS systems the general safety regulations for telecommunication systems according to VDE 0800 must be observed. Inter alia:

- separated cable routing of high and low voltage lines,
- minimum distance of 10 cm in case of a common cable routing,
- use of separators between high and low voltage lines within shared cable ducts,
- use of standard telecommunication lines, e.g. J-Y (St) Y with 0.8 mm diameter,
- already existing lines (modernisation) with deviating cross-sections can be used in compliance with the loop resistance.

requirements to protect against lightning

ATTENTION! **Device damage due to overvoltage.**

By suitable lightning protection measures it has to be ensured that the electric voltage of 32 V DC at each connection is not to be exceeded.

Note for video surveillance according to DIN 33450

Creating and saving video recordings can infringe personal rights.
Observe the current regulations and labelling requirements when installing and operating video components.

Warnung!
Dies ist eine Einrichtung der Klasse A. Diese Einrichtung kann im Wohnbereich Funkstörungen verursachen. In diesem Fall kann vom Betreiber verlangt werden, angemessene Maßnahmen durchzuführen.

Product description

Intended use

The FBI6119-0400 is a gateway between the TCS:BUS and IP networks. The FBI6119-0400 can exchange voice, video, control functions and messages between TCS:BUS and IP networks. The FBI6119-0400 is the interface between TCS:BUS system and network-compatible devices (computer, IP telephones, smartphones, tablets...). The device is suitable for DIN-rail mounting (DIN EN 60715:2001-09) in a control cabinet with 6 SU. To set up the FBI6119-0400 an external device (e.g. laptop) is required.

For applications, which differ from the intended use or goes beyond it, the manufacturer accepts no liability.

Short description

audio:
- half-duplex voice communication according to SIP standard
- SIP call destinations via SIP account to a SIP server or via SIP direct calls (peer to peer)
- up to 10 SIP door call destinations can be configured
- up to 5 parallel calls per call destination can be configured
- specific connection establishment to a SIP call destination due to control function at TCS:BUS device
- up to 10 TCS:BUS call destinations can be called by SIP
- integrated SIP server for up to 10 SIP call destinations
- compatible XML file for IP telephones without H.264 (Snom, Auerswald, Gigaset)

video:
- resolution QVGA (320 x 240) and VGA (640 x 480)
- recall of single images via HTTP
- MJPEG video stream via HTTP
- H.264 video stream
- image recording of the call via web interface

messages:
- sending messages to compatible TCS:BUS devices via web interface

control functions:
- up to 10 different control functions can be configured
- triggering control functions via web interface

Configuration:
- multi-lingual web interface (German, English, French and Italian)
- restricted configuration with configo™ (e.g. changing the IP address)
- firmware update (device software) via SD card

Hardware:
- RJ45 connection for Ethernet
- screw terminals for 6-wire TCS:BUS
- slot for SD card (max. 2 GB)
- visual status and error indication via LED

Device overview

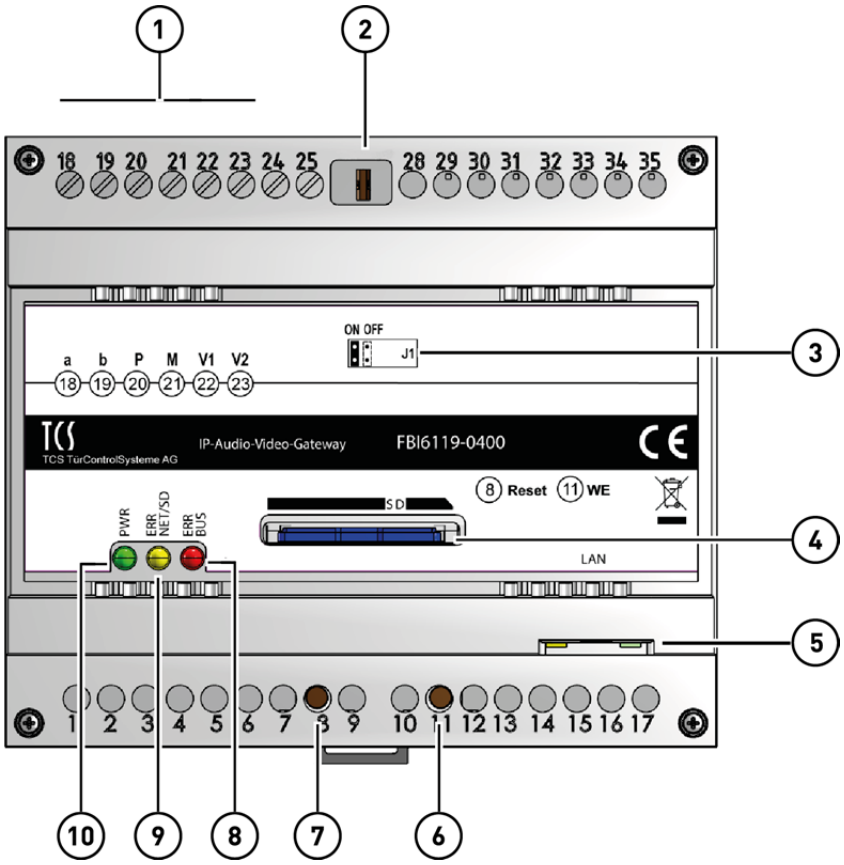

1 connection terminals a, b, P, M, V1 and V2
2 matching resistor (jumper for video IN)
3 type label
4 SD card (not enclosed in the delivery)
5 RJ45 socket with status LED (network connection)
6 WEL button (reset of network settings and passwords)
7 button reset (device restart)
8 LED red (error indication TCS:BUS)
9 LED yellow (error indication network and SD card
10 LED green (indication for operational readiness)

Indication and operating elements

	LED green	OFF: ON: BLINKS (slowly, 1 Hz): BLINKS (fast, 4 Hz):	device is out of service operational readiness (the start process of the FBI6119-0400 is finished) WEL button is pressed (0 to 8 seconds) network settings and password will be reset (press the WEL button for 8 seconds)
	LED yellow (error indication network)	ON: BLINKS (slowly, 1 Hz): BLINKS (fast, 4 Hz): OFF:	start process of the device error in the network error SD card (unreadable) no error in the network or with SD card
	LED red (error indication TCS:BUS)	ON: BLINKS (slowly, 1Hz): OFF:	firmware update is updated error in TCS:BUS no error in TCS:BUS

Technical data

call signalling	SIP compatible
audio	• half-duplex (integrated echo suppressor) • codecs: G.711 (A/µ), G.726 832 kbps), GSM 6.10, iLBC, Speex • up to 5 clients can be called parallel
video encoding	• encodes video from TCS:BUS to IP • JPEG single image, MJPEG and H.264 streaming • QVGA and VGA, up to 25 fps (adjustable) • up to 10 simultaneous streams • live stream via web interface
sending messages to TCS:BUS	• via web interface
control functions	• door release and switching lights via SIP DTMF • up to 10 user-specific control functions can be configured (can be triggered via web interface)
SIP call destinations	• 10 (in case of door calls) • 200 (internal call via control function, if supported by the in-door station)
TCS:BUS call destinations	• 10
integrated SIP server	• up to 10 entries
other functions	• Image buffer • creating XML file for notify of compatible VoIP telephones without H.264 (e.g. Snom, Gigaset, Auerswald) • visual status and error indication via LEDs • IP address via configo™ adjustable • multi-lingual web interface
interfaces	• SD card (max. 2 GB), RJ45 connection, 6-wire TCS:BUS via screw terminals
operating voltage	V_{min} 15 V DC – V_{max} 28 V DC
input current in resting position	I(a) = 0.1 mA, I(P) = 200 mA
max. input current:	I(Pmax) = 250 mA
degree of protection	IP20
housing	plastics
	DIN-rail housing 6 SU according to DIN 43880 for DIN-rail mounting (DIN EN 60715)
dimensions (in mm)	H 90 x W 104 x D 70
acceptable ambient temperature	0 °C ... + 40 °C

Mounting and installation

Ensure when determining the installation site that the FBI6119-0400 must be connected to the network via a LAN cable.

DIN-rail mounting

- ► Put the FBI6119-0400 on the DIN-rail **(1).**
- ► Snap in the FBI6119-0400 with slight pressure **(2)**.

Check if the locking mechanism is securely engaged (ill. 2).

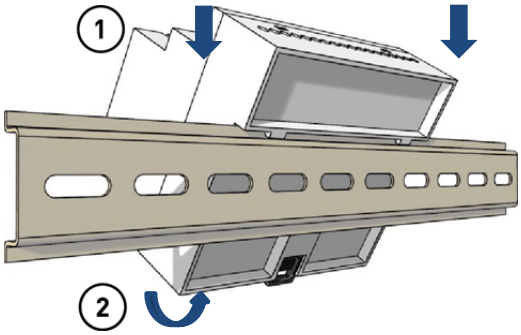

Fig. 1: DIN-rail mounting

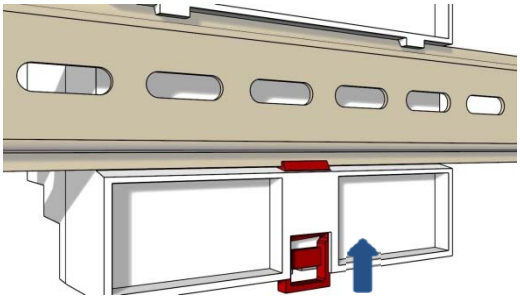

Fig. 2: Engaging

Dismantling from the DIN-rail

- ► Press the locking mechanism downwards with a screwdriver **(1)**.
- ► Pull off the FBI6119-0400 from the bottom site of the DIN-rail and lift it off **(2)**.

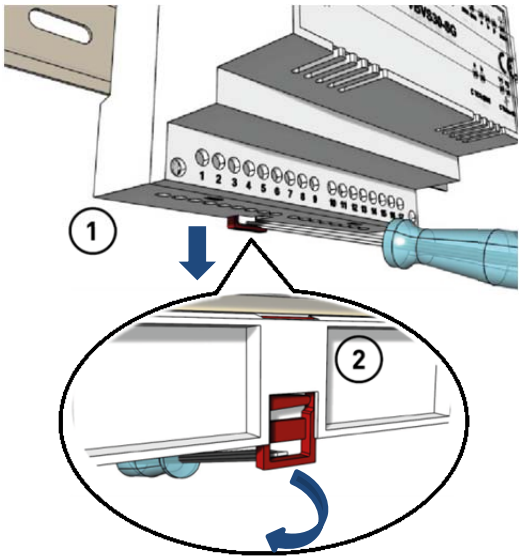

Ill. 3: dismantling from the DIN-rail

Connecting the lines

Connecting lines

connection terminals:

acceptable cross section (diameter)	0.08 ... 0.82 mm² (Ø 0.32 ... 1.0 mm)
max. number of wires per terminal contact	2 x 0.8 mm, 3 x 0.6 mm

Connect further wires by using auxiliary terminals.
Use only connecting lines made of the same material and with the same diameter within one terminal contact.

network connection:

patch cable RJ45	CAT.5e FTP 8-pin

Connecting the lines

- ► Strip the lines.
- ► Connect the lines (a, b, P, M, V1 and V2) according to the labelling **(1)** (ill. 4).
- ► Fix the lines by using the slot screwdriver (enclosed in the delivery).

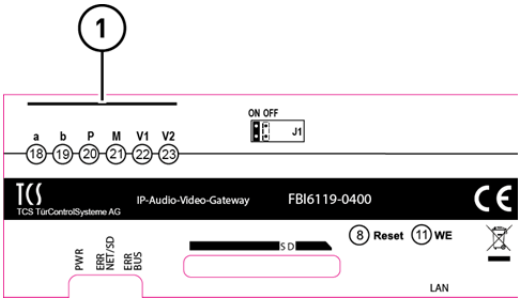

Fig. 4: type label

- ► Connect the RJ45 interface at the FBI6119-0400 and your network by using a patch cable **(2).**

Observe the example circuit on page 10.

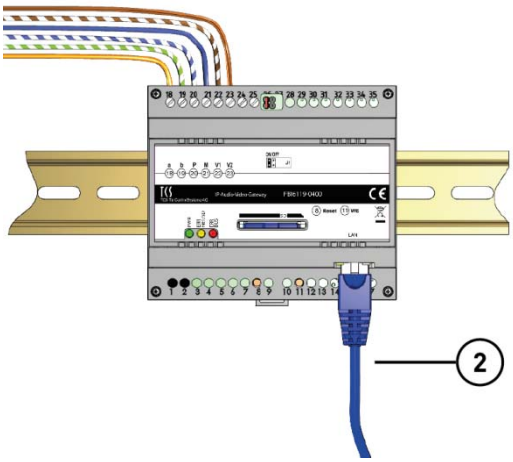

Fig. 5: Connecting the lines

example circuit with WLAN home network

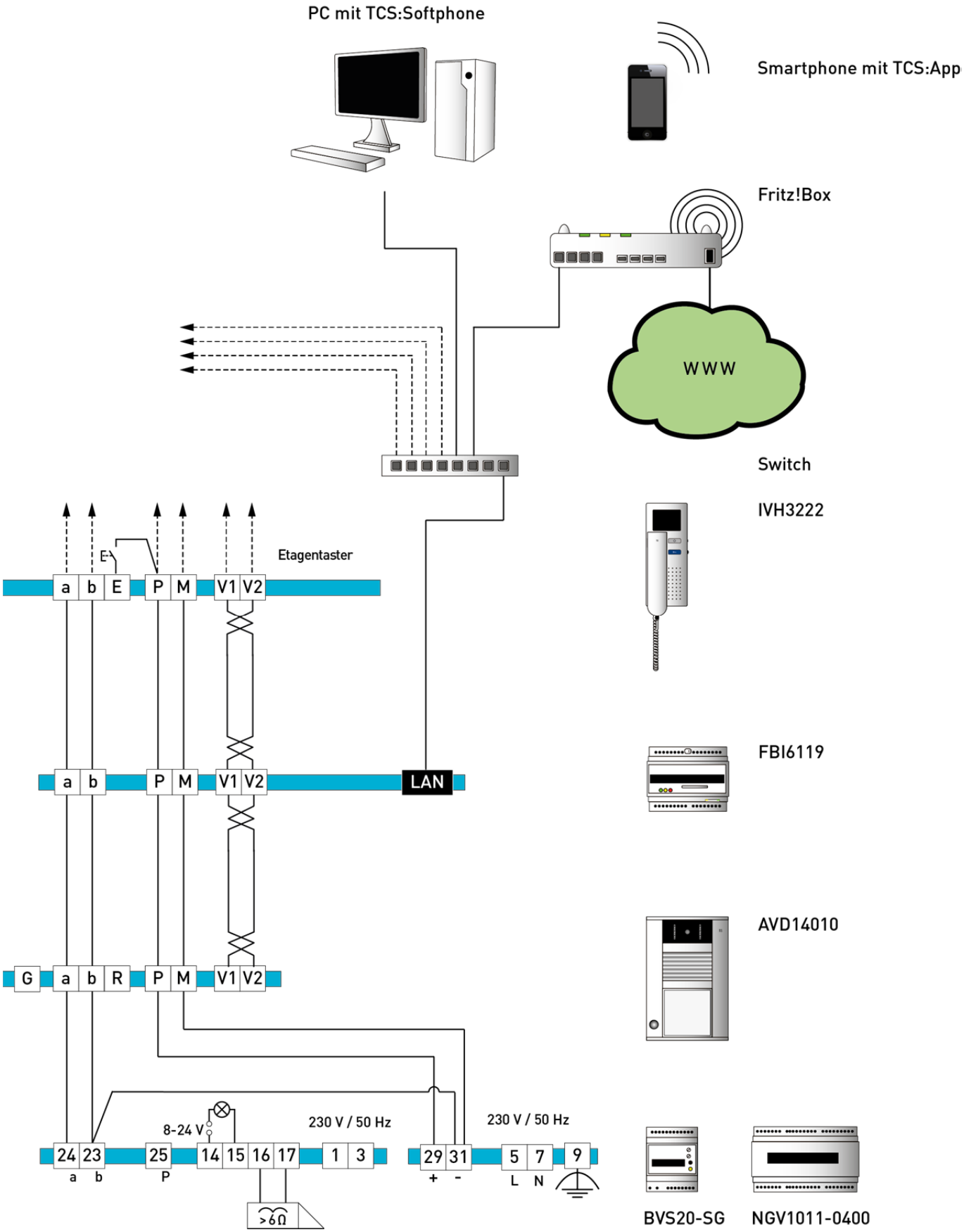

Fig. 6: Example circuit

Initial operation

- Install the devices of the system completely
- Proof the a-, b- and P-wire against each other for short-circuits
- V1 and V2 must not be connected with the P-, a- or b-wire
- Observe the polarity when connecting the video wires V1 (+) and V2 (–)
- Switch on the mains voltage

	We are continually improving our products. We recommend to visit our homepage regularly and look for software updates for your device.

	Detailed information on our terms of service for TCS IP-enabled systems you'll find at: http://www.tcsag.de/fileadmin/user_upload/TCS_DE/Metanavigation/Service_Support/Servicebedingungen-IP_uk.pdf.

Settings on the device

Placing the video matching resistor

	• If the device is installed at the end of a TCS:BUS video strand, the jumper for the video matching resistor must be set. • Ex works the video matching resistor is placed in the position *OFF*.

► Pull off the jumper (video matching resistor) from the position *OFF*.

► Place the jumper on the position *ON* (ill. 8).

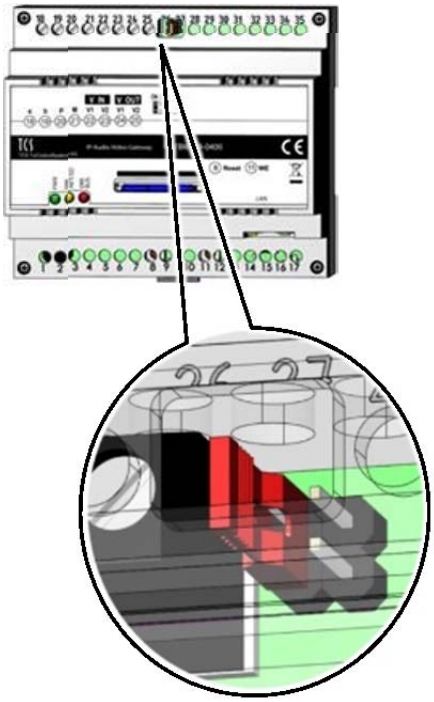

Fig. 7: Placing the matching resistor

restart the device

► Shortly press the *reset button* with a pointed object (ill. 9). The device will restart.

> The restart takes around 60 seconds. The LEDs remain off during the boot procedure.

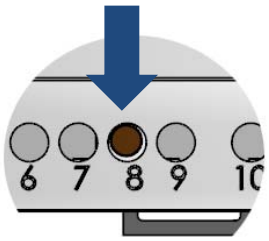

Fig. 8: device restart (reset button)

reset network settings and passwords

If the web interface is not available, you can reset the network settings as well as the passwords to the factory setting.

> - The telephone book or project specific data are not deleted.
> - Use the web interface for a complete upload of the factory settings.

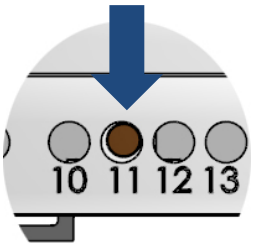

Fig. 9: reset network settings and passwords (WEL button)

► Keep the **WEL button** pressed (8 s) by using a pointed object until the green LED blinks slowly at first and then fast (ill. 10).
► Release the **WEL button** . The network settings and password will be reset.

> The restart takes around 60 seconds. The LEDs remain off during the boot procedure.

installation

Installing an IP network is very complex and requires appropriate background knowledge because of many interconnected parameter and settings. Please contact your network administrator.

> *static and dynamic IP addresses and DHCP service:*
>
> Each device within an IP network needs its own **IP address**. In simple systems, all devices are located within a local IP address range and within the same **subnet**. Thus, all devices can communicate with each other without routing. Within home networks the scheme is as follows:
>
> 192.168 . xxx . xxx
>
> Prefix for local IP addresses according to class C of the convention RFC 1918
>
> **number of the subnet**
> defines the allocation to a subnet, must be the same for all devices within one subnet
>
> **individual number of the device in the subnet**
> each device needs its own number for identification This number must not be assigned twice within one subnet.
>
> **subnet mask**
> The subnet mask divides the IP address into a network part (including the subnet) and into a host part (individual number of a device within the subnet). For the scheme mentioned above the subnet mask is always 255.255.255.0.
>
> **Why using static or dynamic IP addresses?**

Usually a fixed IP address is assigned manually to a device that is providing a service within the network (server). Devices that are only requesting service (clients), thus can be reached under this IP address. For the clients it is recommended to use the automatic assignment of IP addresses per DHCP service. The DHCP service manages a pool of IP addresses for dynamic allocation. Within home networks such a service is available by default. Instead of its activation there is no further configuration necessary at the device. For service devices (e.g. FBI6119-0400) a manual management is necessary. Example: To receive the video image, the smartphone needs to know under which IP address the front-door station can be reached. The smartphone can have a dynamic IP address, because the device itself provides no service.

☞ For further information on installation refer to manual. All manuals are available in the download area at www.tcsag.de .

Settings via configo™

The following configurations can be set with configo™ :

The configuration of the FBI6119-0400 is feasible as of configo version **1.9.0.8** .

- (De-)Activate the DHCP client
- Indicating and changing of:
  - IP address
  - subnet mask
  - DNS server
  - standard gateway
  - admin and user password

Ex works the following settings are available for the FBI6119-0400:

DHCP	**deactivated**
IP address	**192.168.178.202**
subnet mask	**255.255.255.0**
gateway	**192.168.178.1**
DNS server	**192.168.178.1**
user and admin password	**1.234**

If DHCP is activated, the current IP address of the FBI6119-0400 can be read-out™ by using configo.

(De-)Activate the DHCP client

Es works the FBI6119-0400 is delivered with deactivated DHCP client. IP address ex works: 192.168.178.202 (ill. 10).

- ► Start the configo software™ on your PC.
- ► Set resp. remove the checkmark from the box (De-)Activate DHCP.
- ► Update the EEPROM of the FBI6119-0400.

☞ For further information on configo™ refer to help function of the program.

- If the DHCP client is deactivated, you have to assign a valid IP address for the FBI6119-0400 manually.
- For further information refer to manual FBI6119-0400 or consult your network administrator. All manuals are available in the download area at www.tcsag.de .

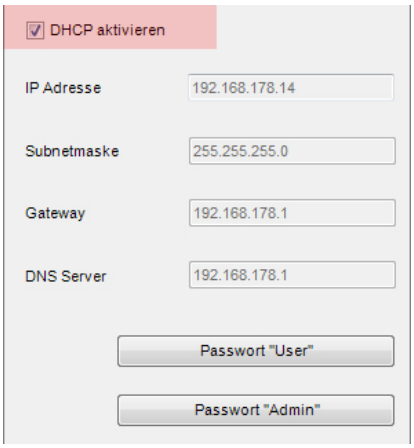

Fig. 10: DHCP client is activated

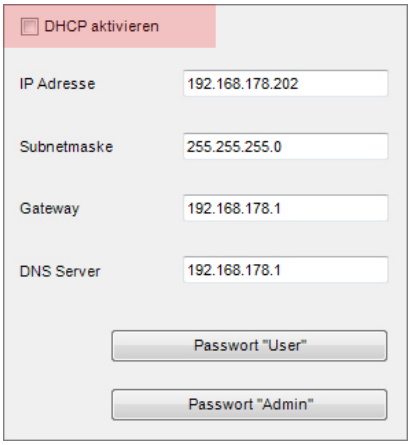

Fig. 11: DHCP client is deactivated

Change password for user and/or admin

- ► Click e.g. the option *Password "User"* A new window will open (ill. 13).
- ► Enter your old password into the text field *Old password*.
- ► Enter your new password into the text field *New password*.
- ► Repeat your entry in the text field *Repeat new password*.
- ► Click *OK*.
- ► Update the EEPROM of the FBI6119-0400.

☞ For further information on configo™ refer to help function of the program.

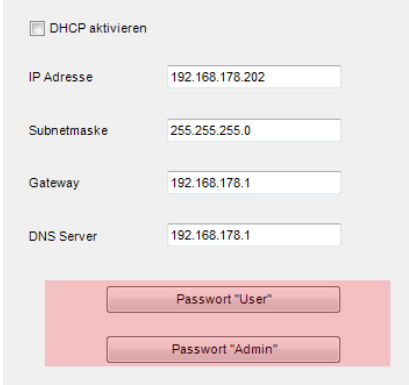

Fig. 12: Changing the password

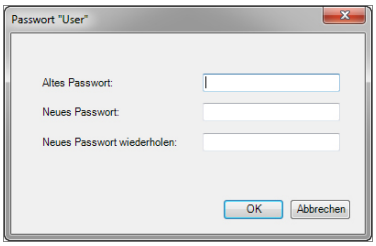

Ill. 13: Create new password

Cleaning

!	ATTEN-TION!	**Loss of function due to short-circuit and corrosion.**
	Water and cleaning agents can enter the device. Electronic elements can get damaged due to short-circuit or corrosion. Avoid water and detergents from entering the device! Clean the device with a dry or slightly wet cloth.	

!	ATTEN-TION!	**Damages on the surface of the device**
	Abrasive or scratching detergents damage the surface of the device. Do not use any abrasive detergents! Remove strongerstains with a pH neutral household cleaner.	

Conformity

Declarations of conformity are available for download under www.tcsag.de.

Information on disposal

Dispose the device separately from domestic waste via a collection point for electronic scrap. Ask your county administration for the responsible collection point.

Dispose the parts of the packaging in collecting tanks for cardboard and paper resp. plastics.

Warranty

We offer **a simplified processing** in case of warranty for qualified electricians.

- Please contact the **TCS HOTLINE** under **hotline@tcsag.de**.
- Our **standard terms and conditions of sale** you'll find under www.tcsag.de.

Service

Please send your questions and inquiries to

hotline@tcsag.de

Headquarters
TCS TürControlSysteme AG, Geschwister-Scholl-Str. 7, 39307 Genthin | Germany
FON: +49 (0) 3933/8799-10, FAX: +49 (0) 3933/879911, www.tcsag.de

TCS Hotline Germany
FON: +49 41 94 / 9 88 11 88, Fax: +49 41 94/ 9 88 129 Mail: hotline@tcsag.de

Subject to technical changes.

time of printing: 06/2015
PI_FBI6119-0400 7 A